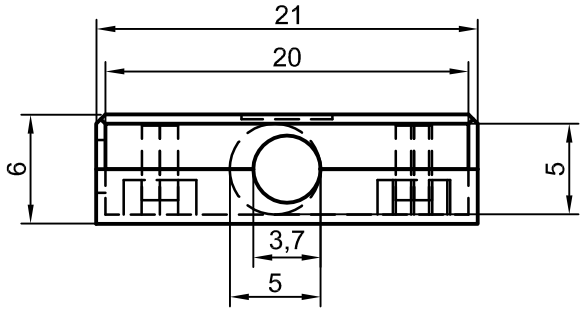

Front View

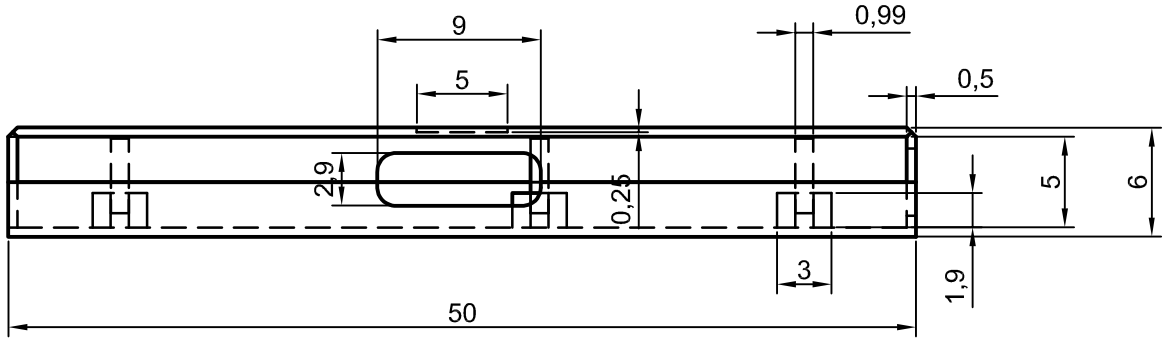

Left Side View

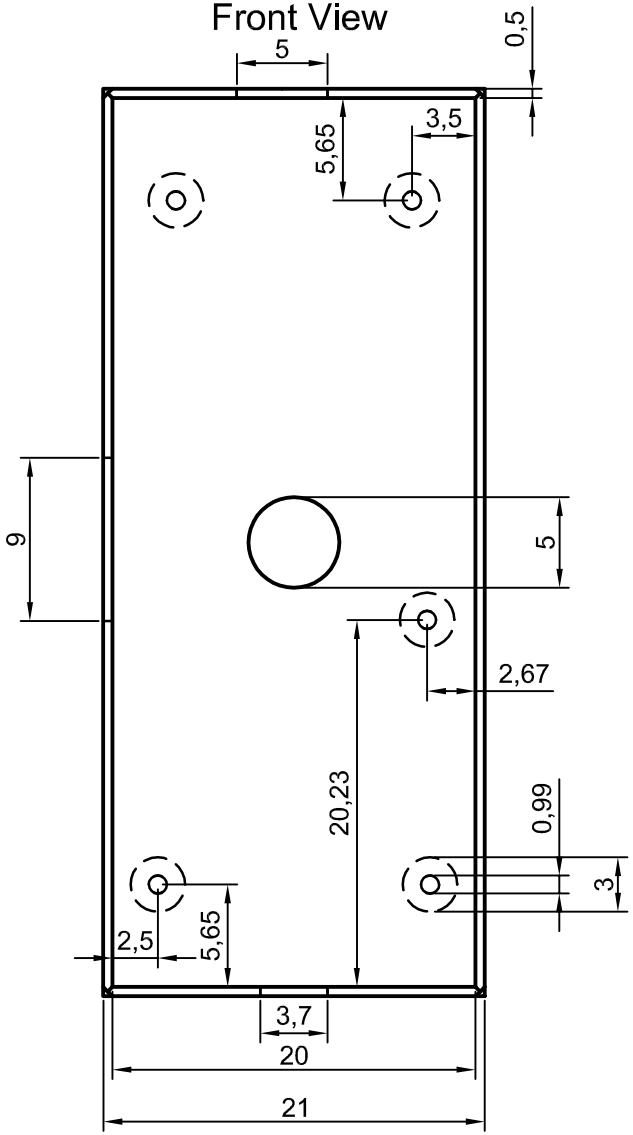

Top View

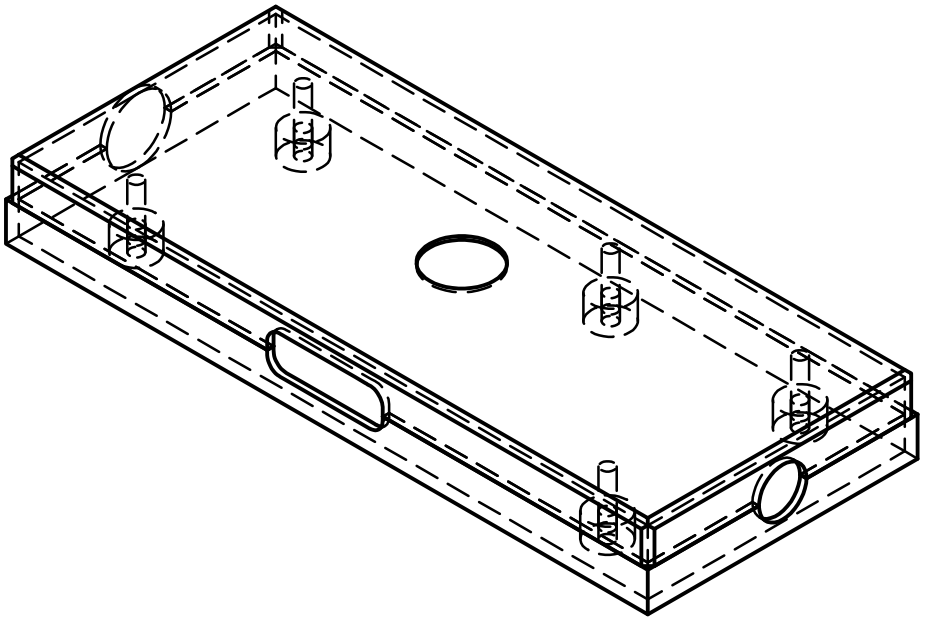

Isometric Drawing