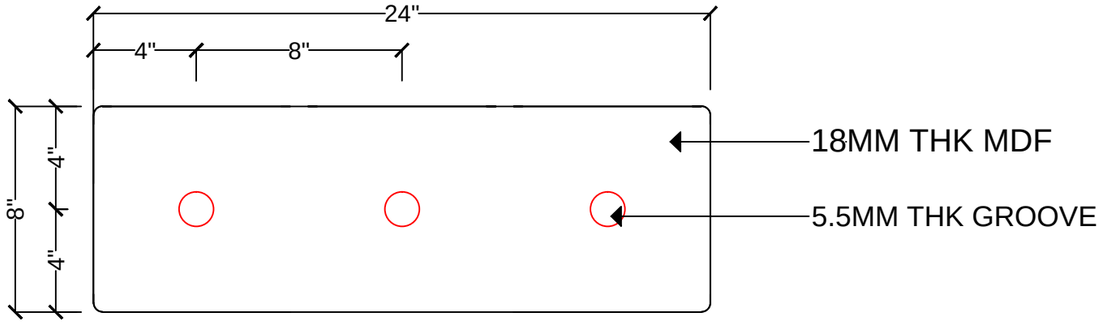

PLAN

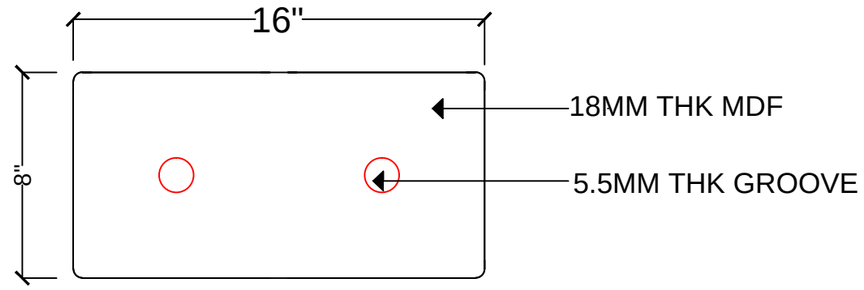

PLAN

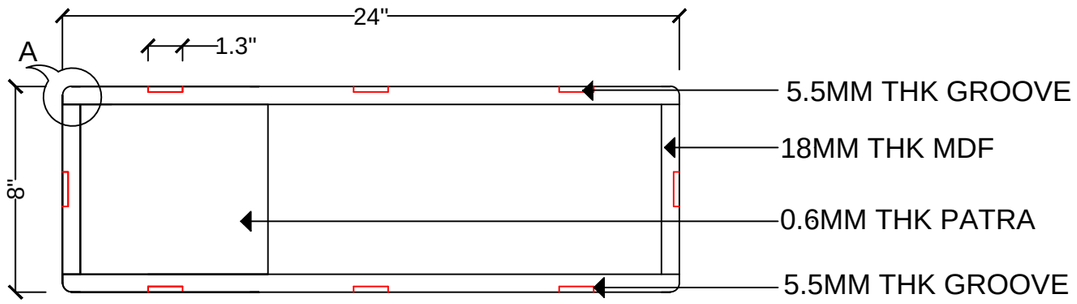

FRONT ELEVATION
3A

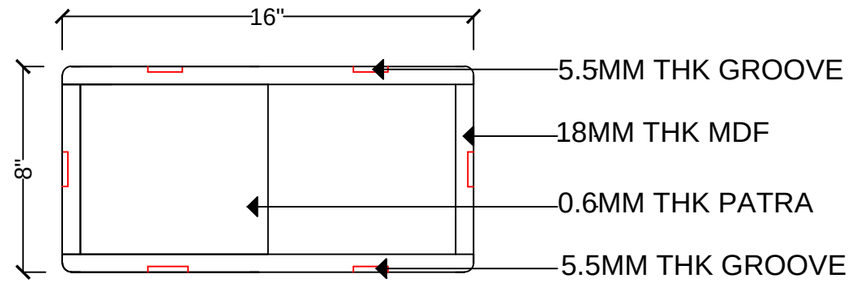

FRONT ELEVATION
2A

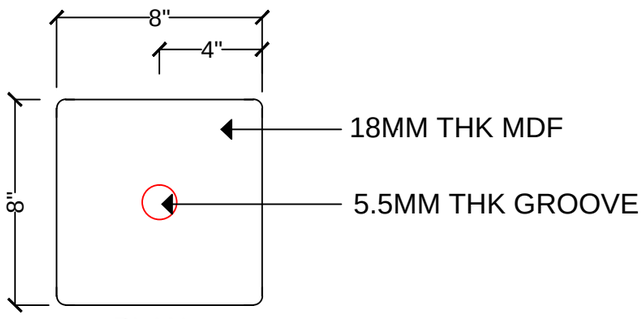

PLAN

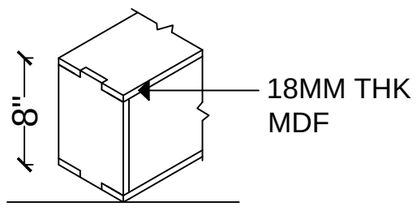

DETAIL AT 'A'
(Dovetail Joint)

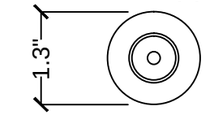

PLAN

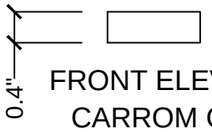

FRONT ELEVATION
CARROM COIN

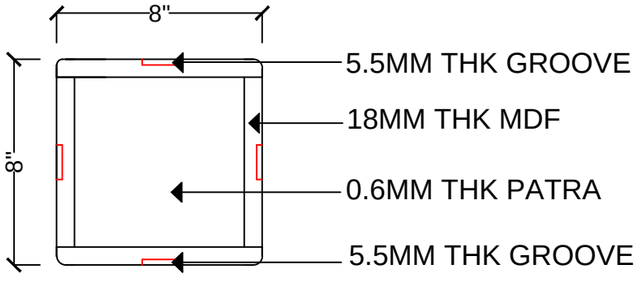

FRONT ELEVATION
A

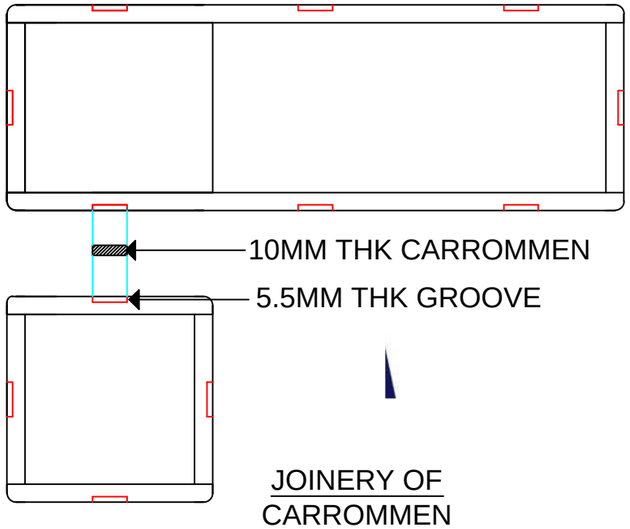
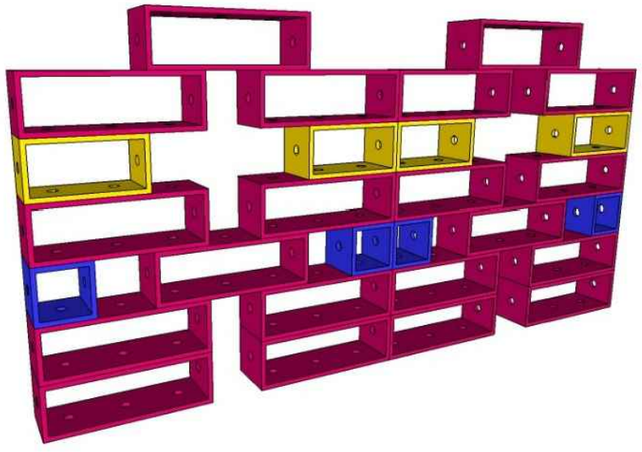
JOINERY OF
CARROMMEN